Data Sheet

Article number: 20472238
Description: E+G Handwheel
GN 213-60-B 15

Measures

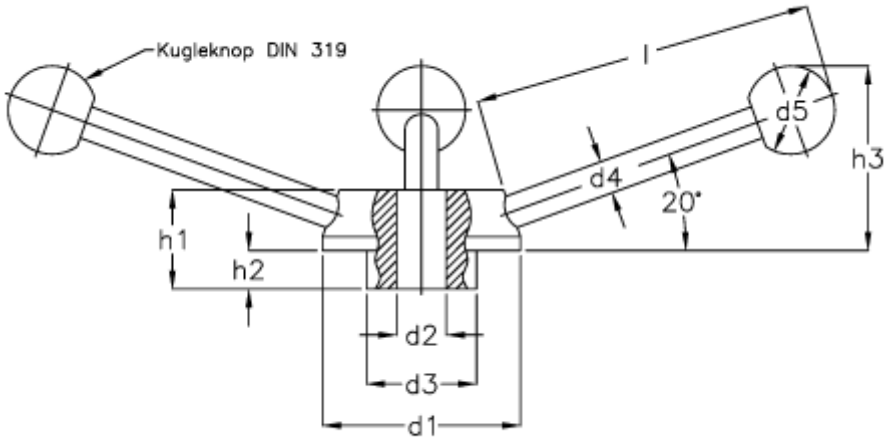

d1 = 60
d2 = B 15
d3 = 32
d4 = 10
d5 = 25
H1 = 30
H2 = 11
l = 96

Product drawings and brochures of any kind may contain errors for which Brd. Klee A/S cannot be liable.